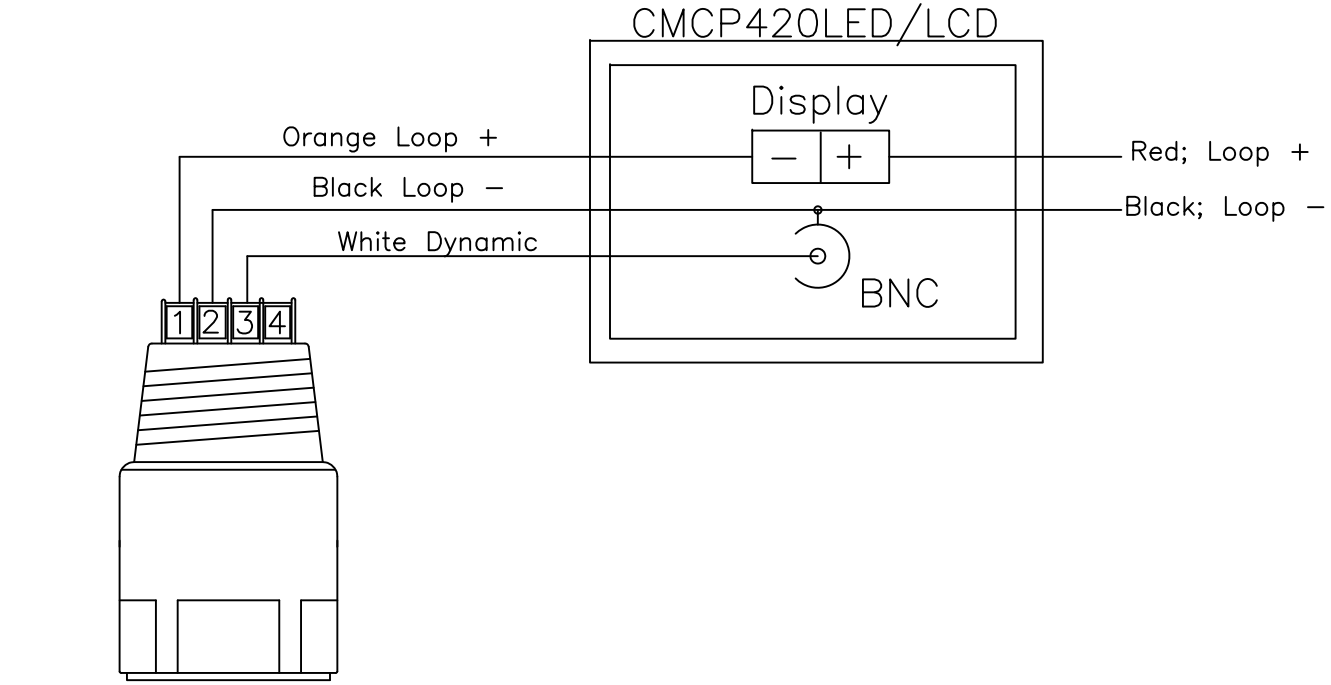

Terminal Key
1. V+
2. V−
3. D+
4. D−

REV.	DATE	DESCRIPTION

UNLESS OTHERWISE SPECIFIED
ALL DIMENSIONS ARE INCHES.

TOLERANCES:

FRACTIONS	DECIMALS	ANGLES
± 1/64	.XX ± 0.01 .XXX ± 0.005 .XXXX ± 0.0005	± 1.0

DRAWN	MDH	DATE 11/15/07
CHECK		
ENG.		
MFG.		
APPR.		

Sales Technology Inc.
League City, Texas

CMCP420 LED/LCD Wiring

SIZE | DWG. NO. | REV.

SCALE NONE | SHEET 1 OF 1