STI Vibration Monitoring Inc.

Vibration Monitoring and Machine Protection Systems

1010 East Main Street, League City, TX 77573 Phone:281.334.0766 Fax: 281.334.4255
www.stiweb.com / www.stiwebstore.com

Condition Monitoring Custom Products

CMCP240 Series
Proximity Speed Sensor

Features:

- M12x1 Threaded Body
- Shielded Sensing Tip
- 4mm Sensing Distance
- LED Status Indicator
- PNP or NPN Output
- Overload Protection
- 2m Integral Cable
- Includes Two Lock Nuts
- Optional Mounting Bracket

Technical Performance

Nominal Sensing Distance:	4mm (0.16”)
Operating Distance:	0 to 3.24mm (0.127”)
Switching Frequency:	700Hz

Electrical

Output Type:	PNP or NPN
Operating Voltage:	10 to 30VDC
Current:	100mA Max
Voltage Drop:	<2.5VDC
Time Delay:	≤25ms
Reverse Polarity Protection:	Yes
Short Circuit Protection:	Yes
Indicator Status:	Yellow LED

Environmental

Operating Temperature Range:	-40 to 85°C (-40 to 185°F)
Sealing:	IP68, IP69K
Approvals:	UL, CE, RoHS

Mechanical

Housing Material:	Chrome-plated Brass
Sensing Face Material:	PPS (Polyphenylene Sulfide)
Cable:	2m Integral Cable

Ordering Information:

CMCP240	-XX	-XXX	Description
	-NPN		Proximity Speed Sensor, NPN Output, with 2m Integral Cable
	-PNP		Proximity Speed Sensor, PNP Output, with 2m Integral Cable
		-00	Without Mounting Bracket
		-01	With Right Angle Mounting Bracket
		-02	With Axial Mounting Bracket

Dimensions

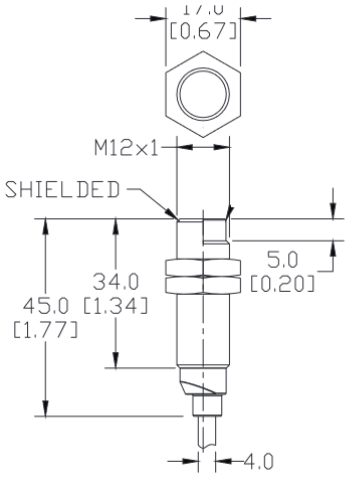

Mounting Hardware

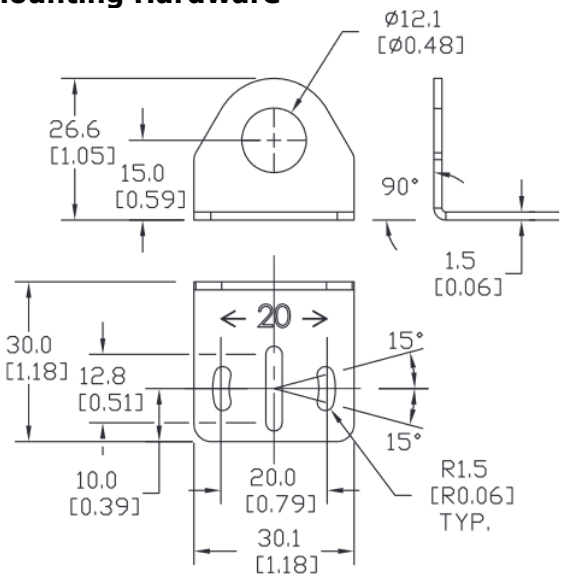

Optional Side Exit Mounting Bracket

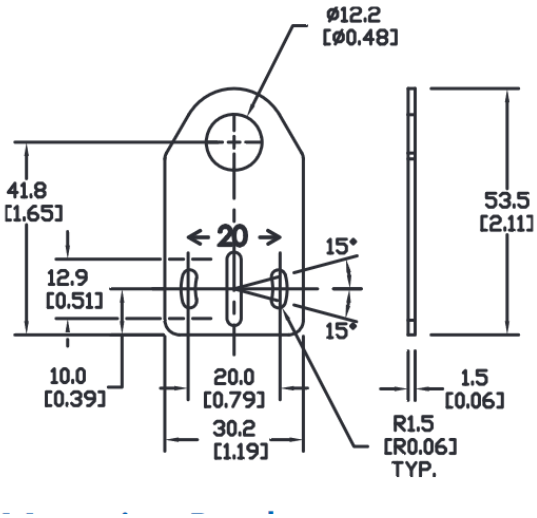

Optional Axial Mounting Bracket
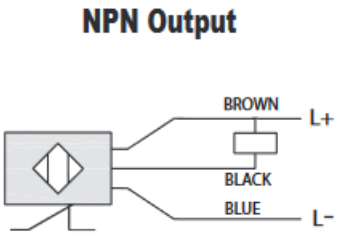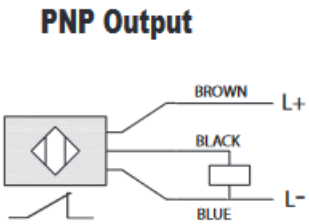
Wiring